ABC FIRE DOOR

920 Lakeshore Road East, Mississauga, Ontario, L5E 1E1

(905) 891-1680 • Fax: (905) 891-1631 • abcfiredoor.com

Door Specification Sheet

Company Name	
Contact Person	**Phone Number:**
Order Date	**Date Required**
Purchase Order #	**Door Tag #**

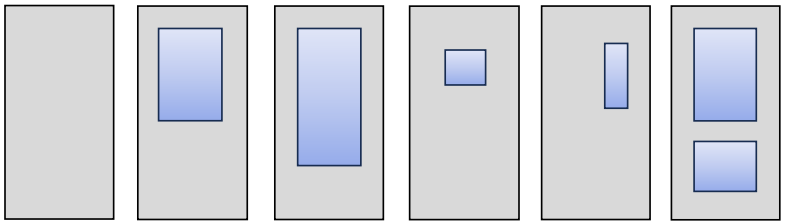

A - Slab | B - Half Lite | C - 3/4 Lite | D1 - View Lite | D2 - Side Lite | E - Double Lite

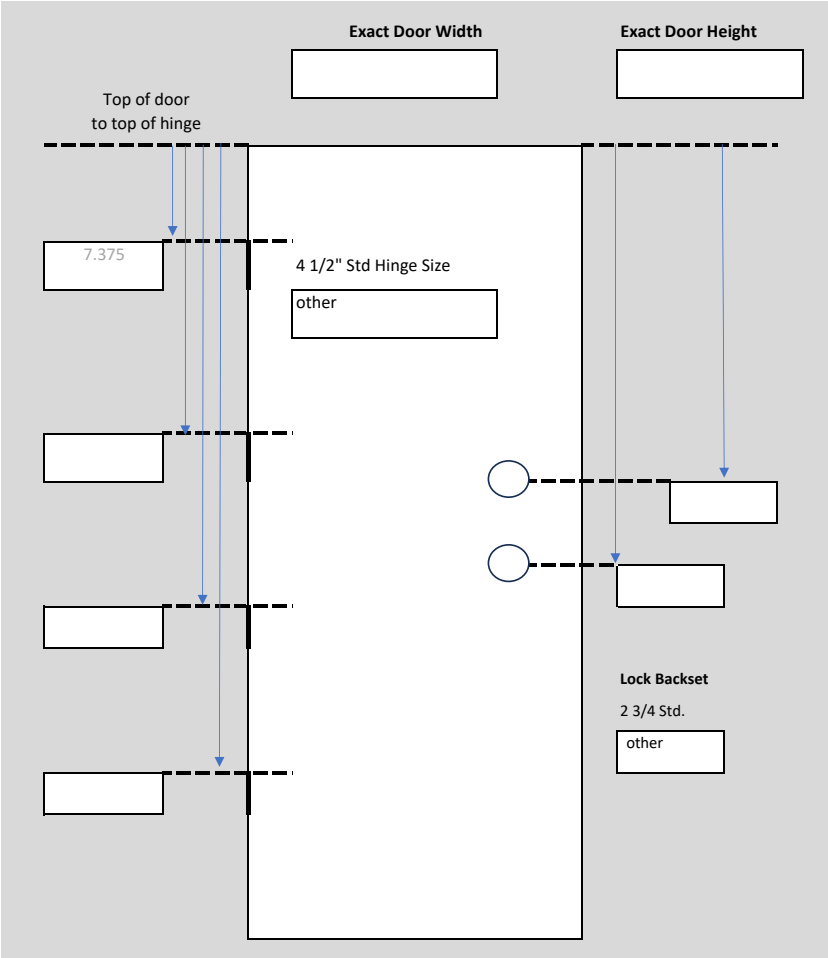

Glass Size	
Width	
Height	
Thickness	1/4" (6mm)

Glass type

- ☐ GPW
- ☐ Laminated
- ☐ Tempered
- ☐ Fire Lite
- ☐ Thermal

Choose Swing

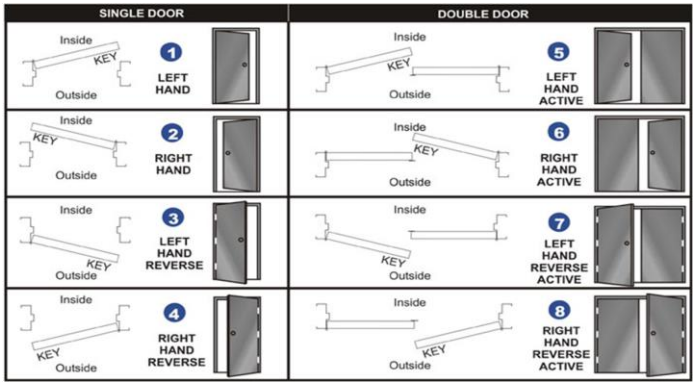

Notes: _____

Check all that apply.

Fire Rating

- ☐ None
- ☐ 20 Min.
- ☐ 45 Min. (3/4 hour)
- ☐ 90 Min. (1 1/2 hour)
- ☐ 180 Min. (3 hour)

Door Core

- ☐ Honeycomb
- ☐ Insulated
- ☐ Steel Stiffened
- ☐ Temperature Rise

Material

- ☐ Hollow Metal 20 ga.
- ☐ Hollow Metal 18 ga.
- ☐ Hollow Metal 16 ga.
- ☐ Hardboard Solid Core
- ☐ Hardboard Hollow Core
- ☐ Stainless Steel
- ☐ Galvanized
- ☐ Embossed
- ☐ Other (Specify)

Lock / Door Prep

- ☐ 161 prep (2 1/8 hole)
- ☐ Dead Lock (2 1/8 hole)
- ☐ Rim Panic
- ☐ Mortise Lock
- ☐ Mortise Deadlock
- ☐ ASA
- ☐ Flush Bolt
- ☐ Peep Hole

Z-Astragal

- ☐ ASA
- ☐ Flush Bolt
- ☐ Deadlock
- ☐ Blank
- ☐ Flat Astragal (2")

Seams

- ☐ Std (lock seam only)
- ☐ Tacked
- ☐ Tack & Fill
- ☐ Fully Welded